August 2015

FUSB302
Programmable USB Type-C Controller w/PD

Features

- Dual-Role Functionality with Autonomous DRP Toggle
- Ability to connect as either a host or a device based on what has been attached.
- Software configurable either as a dedicated host, dedicated device, or dual role.
  - Dedicated devices can operate both on a Type-C receptacle or a Type-C plug with a fixed CC and VCONN channel.
- Full Type-C 1.1 Support. Integrates the following functionality of the CC pin
  - Attach/Detach Detection as Host
  - Current Capability Indication as Host
  - Current Capability Detection as Device
  - Audio Adapter Accessory Mode
  - Debug Accessory Mode
  - Active Cable Detection
- Integrates CCx to VCONN switch with over-current limiting for powering USB3.1 Full Featured cables.
- USB Power Delivery (PD) 2.0, Version 1.1 Support
  - Automatic GoodCRC Packet Response
  - Automatic retries of sending a packet if a GoodCRC is not received
  - Automatic soft reset packet sent with retries if needed
  - Automatic Hard Reset Ordered Set Sent
- Dead Battery Support (SNK Mode Support when No Power Applied)
- Low Power Operation: I_{CC} = 25 µA (Typical)
- Packaged in 9-Ball WLCSP (1.215 mm x 1.260 mm) and 14-lead MLP (2.5 mm x 2.5 mm, 0.5 mm Pitch)

Description

The FUSB302 targets system designers looking to implement a DRP/SRC/SNK USB Type-C connector with low amount of programmability.

The FUSB302 enables the USB Type-C detection including attach, and orientation. The FUSB302 integrates the physical layer of the USB BMC power delivery protocol to allow up to 100 W of power and role swap. The BMC PD block enables full support for alternative interfaces of the Type-C specification.

Applications

- Smartphones
- Tablets
- Laptops
- Notebooks
- Power Adapters
- Cameras
- Dongles

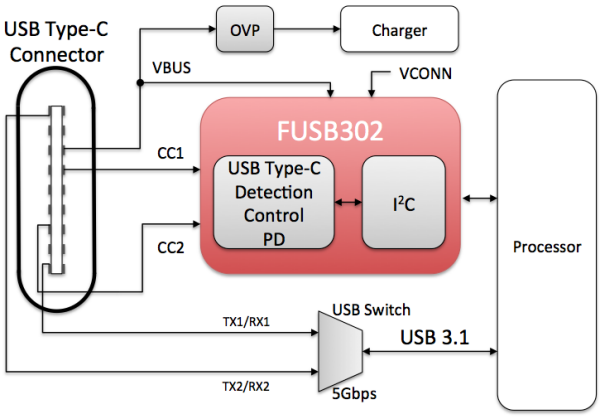

Figure 1. Block Diagram

Ordering Information

Part Number	Operating Temperature Range	Package	Packing Method
FUSB302UCX	-40 to 85°C	9-Ball Wafer-Level Chip Scale Package (WLCSP), 0.4 mm Pitch	Tape and Reel
FUSB302MPX	-40 to 85°C	14-Lead MLP 2.5 mm x 2.5 mm, 0.5 mm Pitch	Tape and Reel

© 2015 Fairchild Semiconductor Corporation

Typical Application

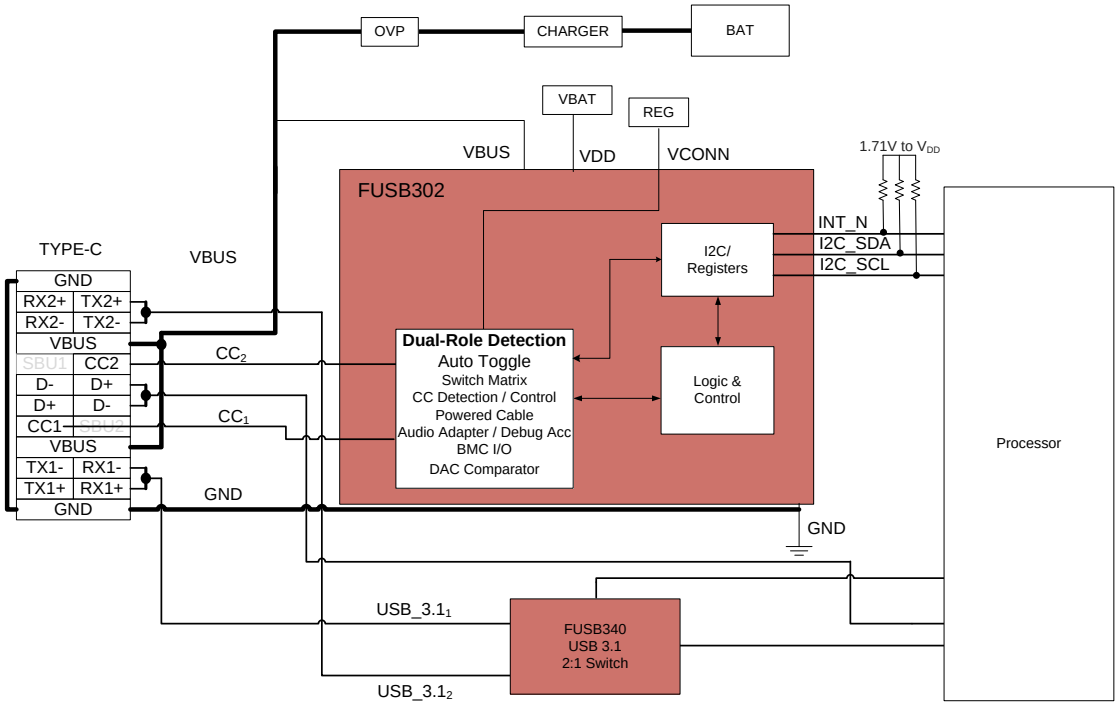

Figure 2. Typical Application

Block Diagram

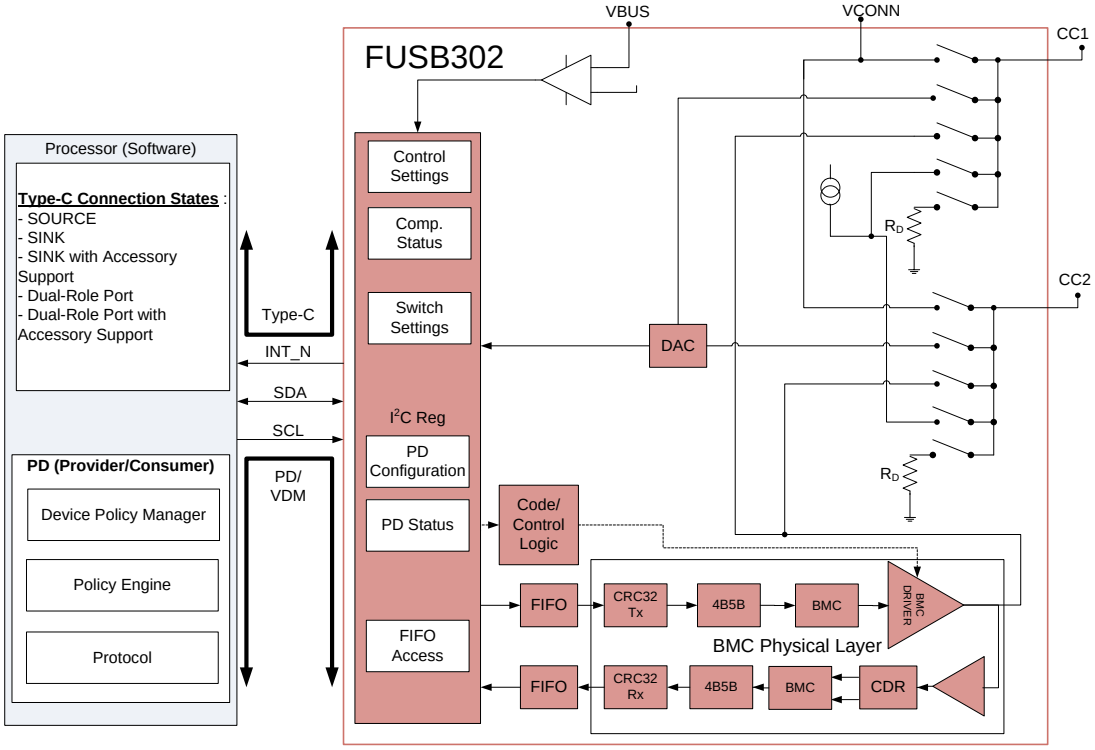

Figure 3. Functional Block Diagram

Pin Configuration

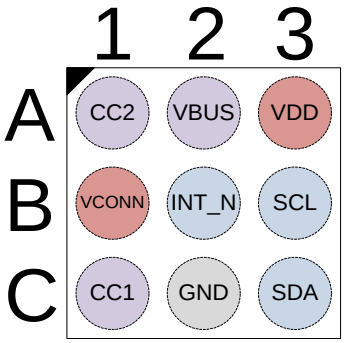

Figure 4. FUSB302UCX Pin Assignment (Top Through View)

Pin Map

	Column 1	Column 2	Column 3
Row A	CC2	VBUS	VDD
Row B	VCONN	INT_N	SCL
Row C	CC1	GND	SDA

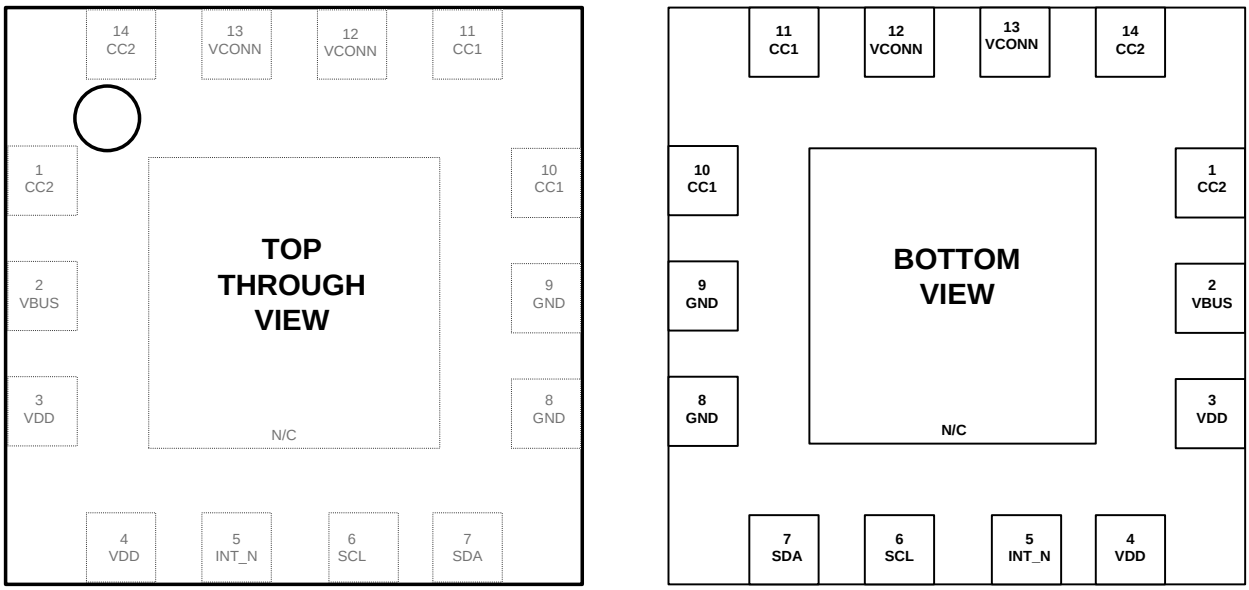

Figure 5. FUSB302MPX Pin Assignment (N/C = No Connect)

Pin Descriptions

Name	Type	Description
USB Type-C Connector Interface		
CC1/CC2	I/O	Type-C connector Configuration Channel (CC) pins. Initially used to determine when an attach has occurred and what the orientation of the insertion is. Functionality after attach depends on mode of operation detected. Operating as a host: 1. Sets the allowable charging current for VBUS to be sensed by the attached device 2. Used to communicate with devices using USB BMC Power Delivery 3. Used to detect when a detach has occurred Operating as a device: 1. Indicates what the allowable sink current is from the attached host. -Used to communicate with devices using USB BMC Power Delivery
GND	Ground	Ground
VBUS	Input	VBUS input pin for attach and detach detection when operating as an upstream facing port (Device). Expected to be an OVP protected input.
Power Interface		
VDD	Power	Input supply voltage.
VCONN	Power Switch	Regulated input to be switched to correct CC pin as VCONN to power USB3.1 full-featured cables and other accessories
Signal Interface		
SCL	Input	I^2C serial clock signal to be connected to the phone-based I^2C master.
SDA	Open-Drain I/O	I^2C serial data signal to be connected to the phone-based I^2C master
INT_N	Open-Drain Output	Active LOW open drain interrupt output used to prompt the processor to read the I^2C register bits

Configuration Channel Switch

The FUSB302 integrates the control and detection functionality required to implement a USB Type-C host, device or dual-role port including:

- Device Port Pull-Down(R_D)
- Host Port Pull-Up (I_P)
- VCONN Power Switch with OCP for Full-Featured USB3.1 Cables
- USB BMC Power Delivery Physical Layer
- Configuration Channel (CC) Threshold Comparators.

Each CC pin contains a flexible switch matrix that allows the host software to control what type of Type-C port is implemented. The switches are shown in Figure 6.

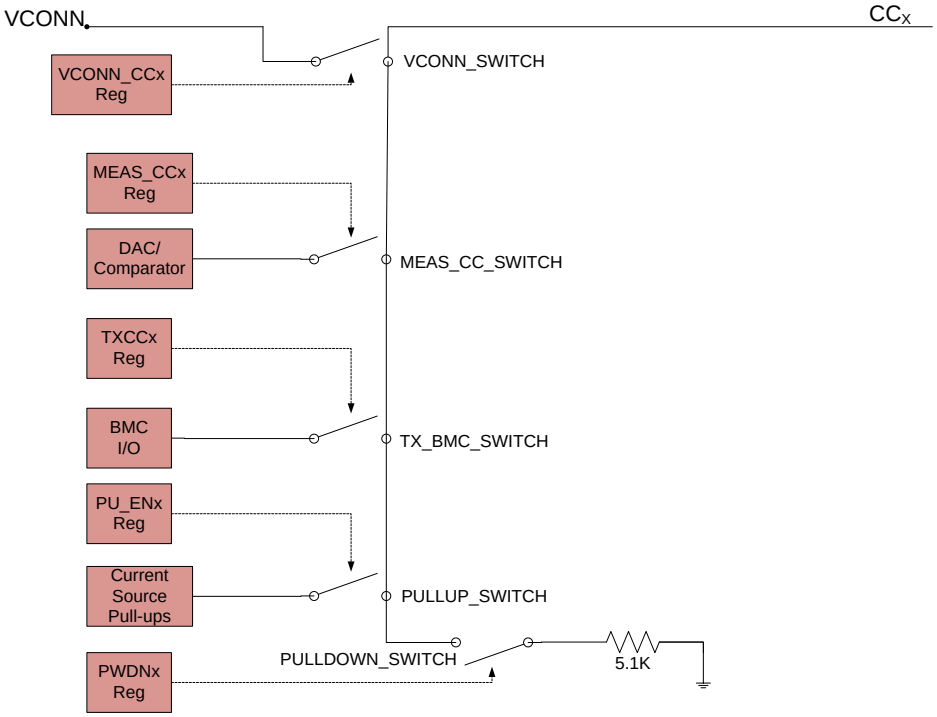

Figure 6. Configuration Channel Switch Functionality

Type-C Detection

The FUSB302 implements multiple comparators and a programmable DAC that can be used by software to determine the state of the CC and VBUS pins. This status information provides the processor all of the information required to determine attach, detach and charging current configuration of the Type-C port connection.

The FUSB302 has three fixed threshold comparators that match the USB Type-C specification for the three charging current levels that can be detected by a Type-C device. These comparators automatically cause BC_LVL and COMP interrupts to occur when there is a change of state. In addition to the fixed threshold comparators, the host software can use the 6-bit DAC to determine the state of the CC lines more accurately.

The FUSB302 also has a fixed comparator that monitors if VBUS has reached a valid threshold or not. The DAC can be used to measure VBUS up to 20 V which allows the software to confirm that changes to the VBUS line have occurred as expected based on PD or other communication methods to change the charging level.

Detection through Autonomous Device Toggle

The FUSB302 has the capability to do autonomous DRP toggle. In autonomous toggle the FUSB302 internally controls the PDWN1, PDWN2, PU_EN1 and PU_EN2, MEAS_CC1 and MEAS_CC2 and implements a fixed DRP toggle between presenting as a SRC and presenting as a SNK. Alternately, it can present as a SRC or SNK only and poll CC1 and CC2 continuously.

Table 1. Processor Configures the FUSB302 through I²C:

I²C Registers / Bits	Value
TOGGLE	1
PWR	07H
HOST_CUR0	1
HOST_CUR1	0
MEAS_VBUS	0
VCONN_CC1	0
VCONN_CC2	0
Mask Register	0xFE
Maska Register	0xBF
Maskb Register (Except I_TOGDONE and I_BC_LVL Interrupt)	0x01
PWR[3:0]	0x07

Notes:
1. Once it has been determined what the role is of the FUSB302, it returns I_TOGDONE and TOGSS1/2.
2. Processor then can perform a final manual check through I2C.

Manual Device Toggle

The FUSB302 has the capability to do manual DRP toggle. In manual toggle the FUSB302 is configurable by the processor software by I2C and setting TOGGLE = 0.

Manual Device Detection and Configuration

A Type-C device must monitor VBUS to determine if it is attached or detached. The FUSB302 provides this information through the VBUSOK interrupt. After the Type-C device knows that a Type-C host has been attached, it needs to determine what type of termination is applied to each CC pin. The software determines if an Ra or Rd termination is present based on the BC_LVL and COMP interrupt and status bits.

Additionally, for Rd terminations, the software can further determine what charging current is allowed by the Type-C host by reading the BC_LVL status bits. This is summarized in Table 2.

Toggle Functionality

When TOGGLE bit (Control2 register) is set the FUSB302 implements a fixed DRP toggle between presenting as a SRC and as a SNK. It can also be configured to present as a SRC only or SNK only and poll CC1 and CC2 continuously. This operation is turned on with TOGGLE=1 and the processor should initially write HOST_CUR1=0, HOST_CUR0=1 (for default current), VCONN_CC1=VCONN_CC2=0, Mask Register=0xFE, Maska register=0xBF, and Maskb register=0x01, and PWR=0x01. The processor should also read the interrupt register to clear them prior to setting the TOGGLE bit.

Table 2. Device Interrupt Summary

Status Type	Interrupt Status				Meaning
	BC_LVL[1:0]	COMP	COMP Setting	VBUSOK	
CC Detection	2'b00	NA	NA	1	vRA
	2'b01	NA	NA	1	vRd-Connect and vRd-USB
	2'b10	NA	NA	1	vRd-Connect and vRd-1.5
	2'b11	0	6'b11_0100 (2.05 V)	1	vRd-Connect and vRd-3.0
Attach	NA	NA	NA	1	Host Attached, VBUS Valid
Detach	NA	NA	NA	0	Host Detached, VBUS Invalid

The high level software flow diagram for a Type-C device (SNK) is shown in Figure 7.

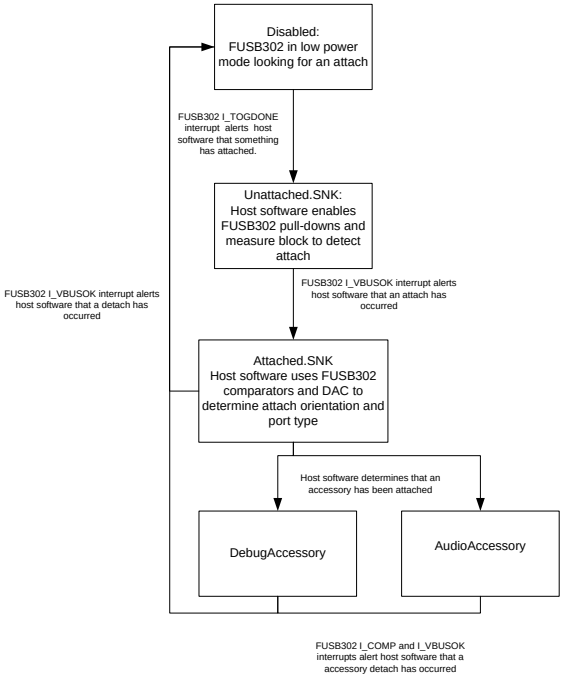

Figure 7. SNK Software Flow

Manual Host Detection and Configuration

When the FUSB302 is configured as a Type-C host, the software can use the status of the comparators and DAC to determine when a Type-C device has been attached or detached and what termination type has been attached to each CC pin.

The FUSB302 allows the host software to change the charging current capabilities of the port through the HOST_CUR control bits. If the HOST_CUR bits are changed prior to attach, the FUSB302 automatically indicates the programmed current capability when a device is attached. If the current capabilities are changed after a device is attached, the FUSB302 immediately changes the CC line to the programmed capability.

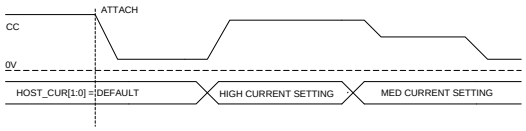

Figure 8. HOST_CUR Changed After Attach

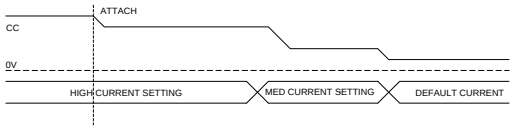

Figure 9. HOST_CUR Changed Prior To Attach

The Type-C specification outlines different attach and detach thresholds for a Type-C host that are based on how much current is supplied to each CC pin. Based on the programmed HOST_CUR setting, the software adjusts the DAC comparator threshold to match the Type-C specification requirements. The BC_LVL comparators can also be used as part of the Ra detection flow. This is summarized in Table 3.

Table 3. Host Interrupt Summary

Termination	HOST_CUR[1:0]	Interrupt Status			Attach/Detach
		BC_LVL[1:0]	COMP	COMP Setting	
Ra	2'b01	2'b00	NA	NA	NA
	2'b10	2'b01	0	6'b00_1010 (0.42 V)	
	2'b11	2'b10	0	6'b01_0011 (0.8 V)	
Rd	2'b01, 2'b10	NA	0	6'b10_0110 (1.6 V)	Attach
		NA	1	6'b10_0110 (1.6 V)	Detach
	2'b11	NA	0	6'b11_1110 (2.6 V)	Attach
		NA	1	6'b11_1110 (2.6 V)	Detach

The high level software flow diagram for a Type-C Host (SRC) is shown below in Figure 10.

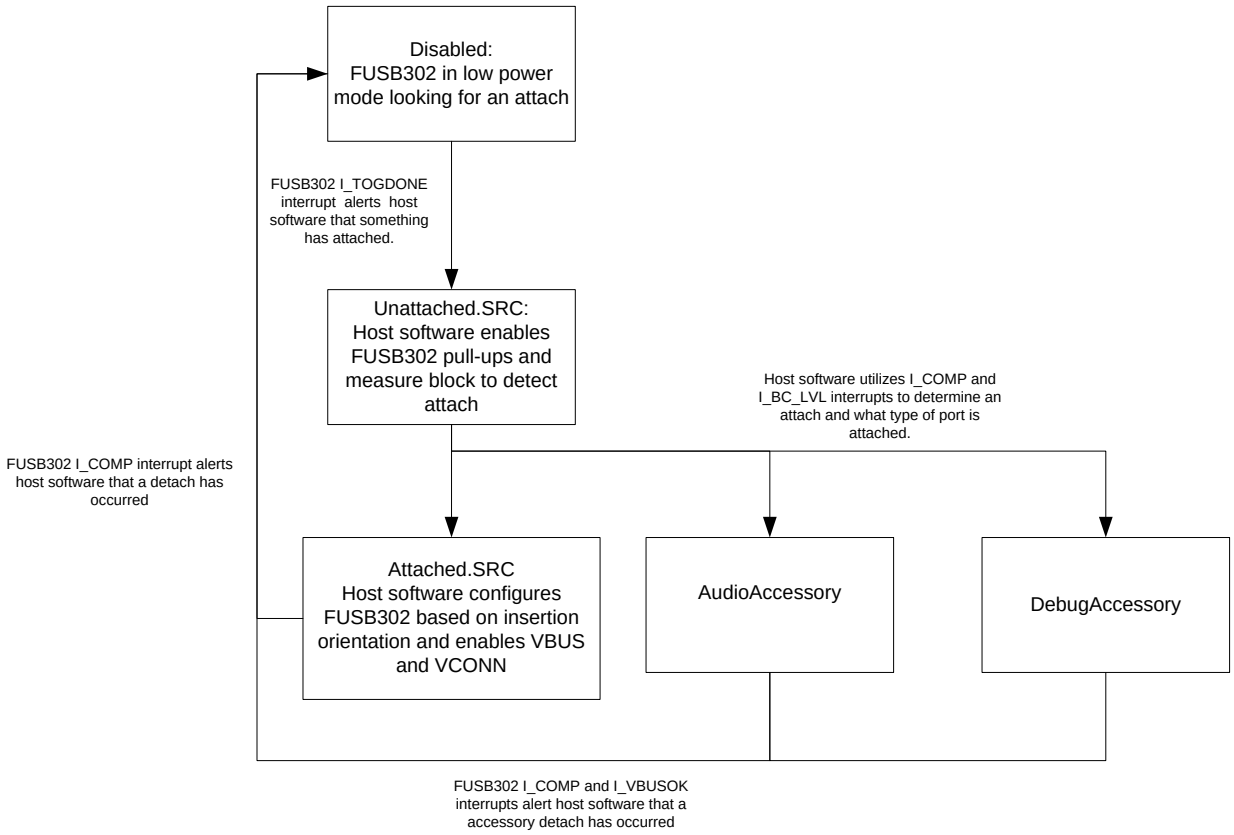

Figure 10. SRC Software Flow

Manual Dual-Role Detection and Configuration

The Type-C specification allows ports to be both a device and a host depending on what type of port has attached. This functionality is similar to USB OTG ports with the current USB connectors and is called a dual-role port. The FUSB302 can be used to implement a dual-role port. A Type-C dual role port toggles between presenting as a Type-C device and a Type-C host. The host software controls the toggle time and configuration of the FUSB302 in each state as shown in Figure 11.

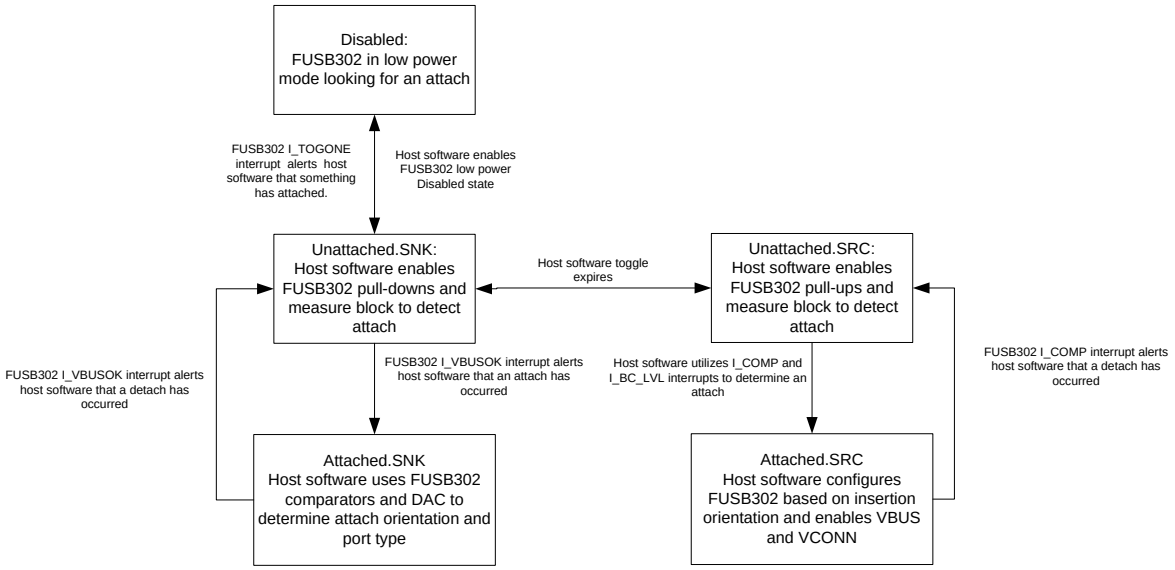

Figure 11. DRP Software Flow

BMC Power Delivery

The Type-C connector allows USB Power Delivery (PD) to be communicated over the connected CC pin between two ports. The communication method is the BMC Power Delivery protocol and is used for many different reasons with the Type-C connector. Possible uses are outlined below.

- Negotiating and controlling charging power levels
- Alternative Interfaces such as MHL, Display Port
- Vendor specific interfaces for use with custom docks or accessories
- Role swap for dual-role ports that want to switch who is the host or device
- Communication with USB3.1 full featured cables

The FUSB302 integrates a thin BMC PD client which includes the BMC physical layer and packet FIFOs (48 bytes for transmit and 80 bytes for receive) which allows packets to be sent and received by the host software through I2C accesses. The FUSB302 allows host software to implement all features of USB BMC PD through writes and reads of the FIFO and control of the FUSB302 physical interface.

The FUSB302 uses tokens to control the transmission of BMC PD packets. These tokens are written to the transmit FIFO and control how the packet is transmitted on the CC pin. The tokens are designed to be flexible and support all aspects of the USB PD specification. The FUSB302 additionally enables control of the BMC transmitter through tokens. The transmitter can be enabled or disabled by specific token writes which allow faster packet processing by burst writing the FIFO with all the information required to transmit a packet.

The FUSB302 receiver stores the received data and the received CRC in the receive FIFO when a valid packet is received on the CC pin. The BMC receiver automatically enables the internal oscillator when activity is sensed on the CC pin and load the FIFO when a packet is received. The I_ACTIVITY and I_CRC_CHK interrupts alert the host software that a valid packet was received.

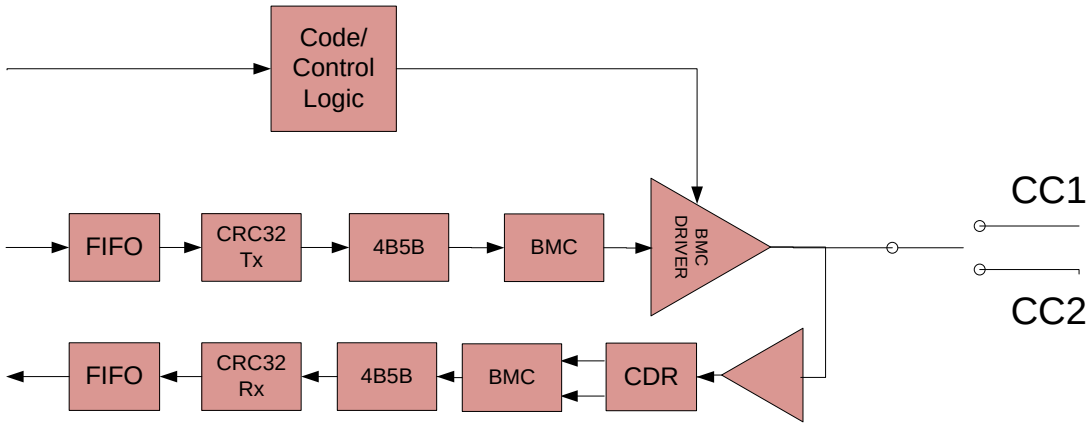

Figure 12. USB BMC Power Delivery Blocks

Power Level Determination

The Type-C specification outlines the order of precedence for power level determination which covers power levels from basic USB2.0 levels to the highest levels of USB PD. The host software is expected to follow the USB Type-C specification for charging current priority based on feedback from the FUSB302 detection, external BC1.2 detection and any USB Power Delivery communication.

The FUSB302 does not integrate BC1.2 charger detection which is assumed available in the USB transceiver or USB charger in the system.

Power Up, Initialization and Reset

When power is first applied through VDD, the FUSB302 is reset and registers are initialized to the default values shown in the register map.

The FUSB302 can be reset through software by programming the SW_RES bit in the RESET register.

If no power applied to VDD then the SRC can recognize the FUSB302 as a SNK.

PD Automatic Receive GoodCRC

The power delivery packets require a GoodCRC acknowledge packet to be sent for each received packet where the calculated CRC is the correct value. This calculation is done by the FUSB302 and triggers the I_CRC_CHK interrupt if the CRC is good. If the AUTO_CRC (Switches1 register bit) is set and AUTO_PRE=0, then the FUSB302 will automatically send the GoodCRC control packet in response to alleviate the local processor from responding quickly to the received packet. If GoodCRC is required for anything beyond SOP, then enable SOP*.

PD Send

The FUSB302 implements part of the PD protocol layer for sending packets in an autonomous fashion.

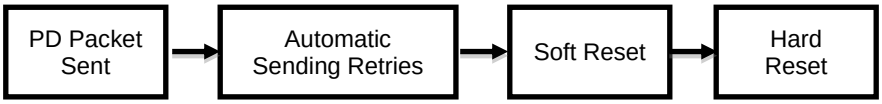

PD Automatic Sending Retries

If GoodCRC packet is not received and AUTO_RETRY is set, then a retry of the same message that was in the TxFIFO written by the processor is executed within tRetry and that is repeated for NRETRY times.

PD Send Soft Reset

If the correct GoodCRC packet is still not received for all retries then I_RETRYFAIL interrupt is triggered and if AUTO_SOFT_RESET is set, then a Soft Reset packet is created (MessageID is set to 0 and the processor upon servicing I_RETRYFAIL would set the true MessageIDCounter to 0.

If this Soft Reset is sent successfully where a GoodCRC control packet is received with a MessageID=0 then I_TXSENT interrupt occurs.

If not, this Soft Reset packet is retried NRETRIES times (MessageID is always 0 for all retries) if a GoodCRC acknowledge packet is not received with CRCReceiveTimer expiring (tReceive of 1.1 ms max). If all retries fail, then I_SOFTFAIL interrupt is triggered.

PD Send Hard Reset

If all retries of the soft reset packet fail and if AUTO_HARD_RESET is set, then a hard reset ordered set is sent by loading up the TxFIFO with RESET1, RESET1, RESET1, RESET2 and sending a hard reset. Note only one hard reset is sent since the typical retry mechanism doesn't apply. The processor's policy engine firmware is responsible for retrying the hard reset is it doesn't receive the required response.

I²C Interface

The FUSB302 includes a full I²C slave controller. The I²C slave fully complies with the I²C specification version 6 requirements. This block is designed for Fast Mode Plus traffic up to 1 MHz SCL operation.

The TOGGLE features allow for very low power operation with slow clocking thus may not be fully compliant to the 1 MHz operation. Examples of an I²C write and read sequence are shown in Figure 13 and Figure 14 respectively.

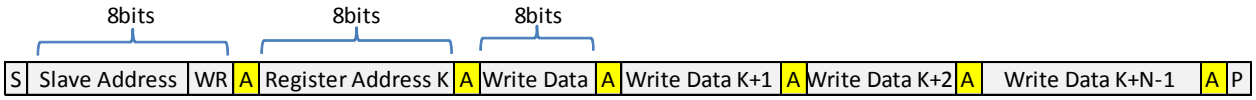

Figure 13. I²C Write Example

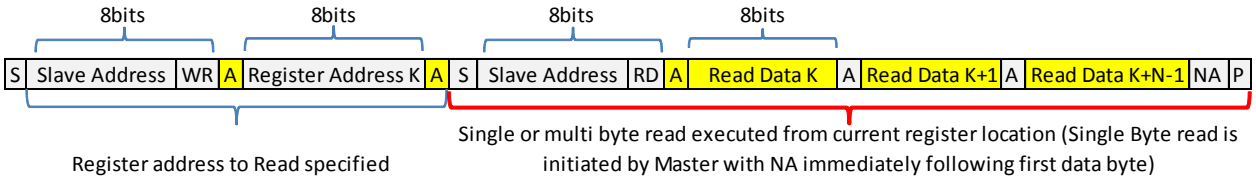

Note: If Register is not specified Master will begin read from current register. In this case only sequence showing in Red bracket is needed

	From Master to Slave	**S**	Start Condition	**NA**	NOT Acknowledge (SDA High)	**RD**	Read =1
	From Slave to Master	**A**	Acknowledge (SDA Low)	**WR**	Write=0	**P**	Stop Condition

Figure 14. I²C Read Example

Absolute Maximum Ratings

Stresses exceeding the absolute maximum ratings may damage the device. The device may not function or be operable above the recommended operating conditions and stressing the parts to these levels is not recommended. In addition, extended exposure to stresses above the recommended operating conditions may affect device reliability. The absolute maximum ratings are stress ratings only.

Symbol	Parameter			Min.	Max.	Unit
Vv_{DD}	Supply Voltage from V_{DD}			-0.5	6.0	V
V_{CC_HDDRP}	CC pins when configured as Host, Device or Dual Role Port			-0.5	6.0	V
V_{VBUS}	VBUS Supply Voltage			-0.5	28.0	V
$T_{STORAGE}$	Storage Temperature Range			-65	+150	C
T_J	Maximum Junction Temperature				+150	C
T_L	Lead Temperature (Soldering, 10 Seconds)				+260	C
ESD	IEC 61000-4-2 System ESD	Connector Pins (VBUS, CCx)	Air Gap	15		kV
			Contact	8		
	Human Body Model, ANSI/ESDA/JEDEC JS-001-2012	All Pins		4		kV
	Charged Device Model, JEDEC JESD22-C101	All Pins		1		kV

Recommended Operating Conditions

The Recommended Operating Conditions table defines the conditions for actual device operation. Recommended operating conditions are specified to ensure optimal performance. Fairchild does not recommend exceeding them or designing to Absolute Maximum Ratings.

Symbol	Parameter	Min.	Typ.	Max.	Unit
V_{VBUS}	VBUS Supply Voltage	4.0	5.0	21.0	V
V_{VDD}	VDD Supply Voltage	2.8[3]	3.3	5.5	V
V_{VCONN}	VCONN Supply Voltage	2.7		5.5	V
I_{VCONN}	VCONN Supply Current			560	mA
T_A	Operating Temperature	-40		+85	C

Note:

3. This is for functional operation only and not the lowest limit for all subsequent electrical specifications below. All electrical parameters have a minimum of 3.0 V operation.

DC and Transient Characteristics

All typical values are at T_A=25°C unless otherwise specified.

Baseband PD

Symbol	Parameter	T_A=-40 to +85°C T_J=-40 to +125°C			Unit
		Min.	Typ.	Max.	
UI	Unit Interval	3.03		3.70	µs
Transmitter					
rOutput	TX Output Resistance	21	50	79	Ω
$t_{EndDriveBMC}$	Time to Cease Driving the Line after the end of the last bit of the Frame			23	µs
$t_{HoldLowBMC}$	Time to Cease Driving the Line after the final High-to-Low Transition	1			µs
V_{OH}	Logic High Voltage	1.05		1.20	V
V_{OL}	Logic Low Voltage	0		75	mV
$t_{StartDrive}$	Time before the start of the first bit of the preamble when the transmitter shall start driving the line	-1		1	µs
t_{RISE_TX}	Rise Time	300			ns
t_{FALL_TX}	Fall Time	300			ns
Receiver					
cReceiver	Receiver Capacitance when Driver isn't Turned On		50		pF
zBmcRx	Receiver Input Impedance	1			MΩ
vSDACstep	BMC Receiver SDAC step size for each code in SDAC[5:0] register		17		mV
vSDAChys	BMC Receiver SDAC hysteresis for each code over the SDAC range (SDAC_HYS=01)		85		mV
tRxFilter	Rx Bandwidth Limiting Filter(5)	100			ns
nTransitionCount	Transitions count in time window of 12 µs Min. and 20 µs Max. (5)	3			edges
tACTIVITY	Time from the last BMC edge(4) to when ACTIVITY bit goes LOW in the STATUS register(5)	5		9	µs

Notes:

4. The last BMC edge includes edge when BMC bus is not driven and thus voltage is the result of pull ups/pull downs to if/when it trips the SDAC receiver threshold to cause another BMC edge.
5. Guaranteed by characterization. Not production tested

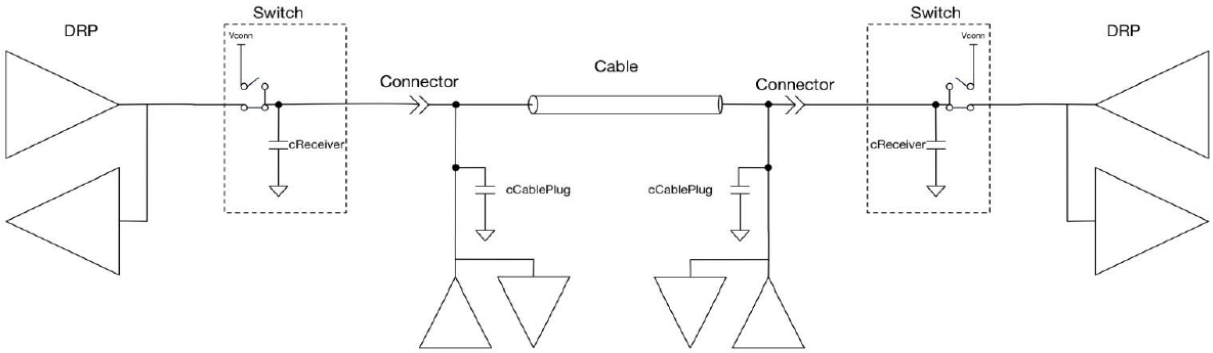

Figure 15. Transmitter Test Load

Type-C CC Switches

Symbol	Parameter		T_A=-40 to +85°C T_J=-40 to +125°C			Unit
			Min.	Typ.	Max.	
R_{SW_CCx}	R_{DSON} for SW1_CC1 and SW1_CC2	VCONN to CC1 & CC2		0.4	1.2	Ω
I_{SW_CCX}	Over-Current Protection (OCP) limit at which VCONN switch shuts off over the entire VCONN voltage range. OCPreg=0Fh.		600	800	1000	mA
tSoftStart	Time taken for the VCONN switch to turn on during which Over-Current Protection is disabled			1.5		ms
I_{80_CCX}	SRC 80 µA CC current (Default) HOST_CUR1=0, HOST_CUR0=1		64	80	96	µA
I_{180_CCX}	SRC 180 µA CC Current (1.5 A) HOST_CUR1=1, HOST_CUR0=0		166	180	194	µA
I_{330_CCX}	SRC 330 µA CC Current (3 A) HOST_CUR1=1, HOST_CUR0=1		304	330	356	µA
V_{UFPDB}	SNK Pull-down Voltage in Dead Battery under all Pull-up SRC Loads				2.18	V
R_{DEVICE}	Device Pull-down Resistance(6)		4.6	5.1	5.6	kΩ
zOPEN	CC Resistance for Disabled State		126			kΩ
$WAKE_{low}$	Wake threshold for CC pin SRC or SNK LOW value. Assumes bandgap and wake circuit turned on ie PWR[0]=1			0.25		V
$WAKE_{high}$	Wake threshold for CC pin SRC or SNK HIGH value. Assumes bandgap and wake circuit turned on ie PWR[0]=1			1.45		V
vBC_LVLhys	Hysteresis on the Ra and Rd Comparators			20		mV
vBC_LVL	CC Pin Thresholds, Assumes PWR=4'h7	BC=2'b00	0.15	0.20	0.25	V
		BC=2'b01	0.61	0.66	0.70	V
		BC=2'b10	1.16	1.23	1.31	V
vMDACstepCC	Measure block MDAC step size for each code in MDAC[5:0] register			42		mV
vMDACstepVBUS	Measure block MDAC step size for each code in MDAC[5:0] register for VBUS measurement			420		mV
vVBUSthr	VBUS threshold at which I_VBUSOK interrupt is triggered. Assumes measure block on ie PWR[2]=1.				4.0	V
tTOG1	When TOGGLE=1, time at which internal versions of PU_EN1=PU_EN2=0 and PWDN1=PDWN2=1 selected to present externally as a SNK in the DRP toggle		30	45	60	ms
tTOG2	When TOGGLE=1, time at which internal versions of PU_EN1=1 or PU_EN2=1 and PWDN1=PDWN2=0 selected to present externally as a SRC in the DRP toggle		20	30	40	ms
tDIS	Disable time after a full toggle (tTOG1+tTOG2) cycle so as to save power	TOG_SAVE_PWR2:1=00		0		ms
		TOG_SAVE_PWR2:1=01		40		
		TOG_SAVE_PWR2:1=10		80		
		TOG_SAVE_PWR2:1=11		160		
Tshut	Temp. for Vconn Switch Off			145		°C
Thys	Temp. Hysteresis for Vconn Switch Turn On			10		°C

Note:

6. R_{DEVICE} minimum and maximum specifications are only guaranteed when power is applied.

Current Consumption

Symbol	Parameter	V_{DD} (V)	Conditions	T_A=-40 to +85°C T_J=-40 to +125°C			Unit
				Min.	Typ.	Max.	
Idisable	Disabled Current	3.0 to 5.5	Nothing Attached, No I^2C Transactions		0.37	5.00	µA
Itog	Unattached (standby) toggle current	3.0 to 5.5	Nothing attached, TOGGLE=1, PWR[3:0]=1h, WAKE_EN=0, TOG_SAVE_PWR2:1=01		25	40	µA
Ipd_stby_meas	BMC PD Standby Current	3.0 to 5.5	Device Attached, BMC PD Active But Not Sending or Receiving Anything, PWR[3:0]=7h,		40		µA

USB PD Specific Parameters

Symbol	Parameter	T_A = -40 to +85°C T_J=-40 to +125°C			Unit
		Min.	Typ.	Max.	
tHardReset	If a Soft Reset message fails, a Hard Reset is sent after tHardReset of CRCReceiveTimer expiring			5	ms
tHardReset Complete	If the FUSB302 cannot send a Hard Reset within tHardResetComplete time because of a busy line, then a I_HARDFAIL interrupt is triggered			5	ms
tReceive	This is the value for which the CRCReceiveTimer expires. The CRCReceiveTimer is started upon the last bit of the EOP of the transmitted packet	0.9		1.1	ms
tRetry	Once the CRCReceiveTimer expires, a retry packet has to be sent out within tRetry time. This time is hard to separate externally from tReceive since they both happen sequentially with no visible difference in the CC output			75	µs
tSoftReset	If a GoodCRC packet is not received within tReceive for NRETRIES then a Soft Reset packet is sent within tSoftReset time.			5	ms
tTransmit	From receiving a packet, we have to send a GoodCRC in response within tTransmit time. It is measured from the last bit of the EOP of the received packet to the first bit sent of the preamble of the GoodCRC packet			195	µs

IO Specifications

Symbol	Parameter	V_{DD} (V)	Conditions	T_A=-40 to +85°C T_J=-40 to +125°C			Unit
				Min.	Typ.	Max.	
Host Interface Pins(INT_N)							
V_{OLINTN}	Output Low Voltage	3.0 to 5.5	I_{OL}=4 mA			0.4	V
T_{INT_Mask}	Time from global interrupt mask bit cleared to when INT_N goes LOW	3.0 to 5.5		50			µs
I^2C Interface Pins – Standard, Fast, or Fast Mode Plus Speed Mode (SDA, SCL)[7]							
V_{ILI2C}	Low-Level Input Voltage	3.0 to 5.5				0.51	V
V_{IHI2C}	High-Level Input Voltage	3.0 to 5.5		1.32			V
V_{HYS}	Hysteresis of Schmitt Trigger Inputs	3.0 to 5.5		94			mV
I_{I2C}	Input Current of SDA and SCL Pins	3.0 to 5.5	Input Voltage 0.26 V to 2.0 V	-10		10	µA
I_{CCTI2C}	VDD Current when SDA or SCL is HIGH	3.0 to 5.5	Input Voltage 1.8 V	-10		10	µA
V_{OLSDA}	Low-Level Output Voltage (Open-Drain)	3.0 to 5.5	I_{OL}=2 mA	0		0.35	V
I_{OLSDA}	Low-Level Output Current (Open-Drain)	3.0 to 5.5	V_{OLSDA}=0.4 V	20			mA
C_I	Capacitance for Each I/O Pin	3.0 to 5.5			5		pF

Note:

7. I^2C pull up voltage is required to be between 1.71 V and V_{DD}.

I^2C Specifications Fast Mode Plus I^2C Specification

Symbol	Parameter	Fast Mode Plus		
		Min.	Max.	Unit
f_{SCL}	I2C_SCL Clock Frequency	0	1000	kHz
$t_{HD;STA}$	Hold Time (Repeated) START Condition	0.26		µs
t_{LOW}	Low Period of I2C_SCL Clock	0.5		µs
t_{HIGH}	High Period of I2C_SCL Clock	0.26		µs
$t_{SU;STA}$	Set-up Time for Repeated START Condition	0.26		µs
$t_{HD;DAT}$	Data Hold Time	0		µs
$t_{SU;DAT}$	Data Set-up Time	50		ns
t_r	Rise Time of I2C_SDA and I2C_SCL Signals[8]		120	ns
t_f	Fall Time of I2C_SDA and I2C_SCL Signals[8]	6	120	ns
$t_{SU;STO}$	Set-up Time for STOP Condition	0.26		µs
t_{BUF}	Bus-Free Time between STOP and START Conditions[8]	0.5		µs
t_{SP}	Pulse Width of Spikes that Must Be Suppressed by the Input Filter	0	50	ns
C_b	Capacitive Load for each Bus Line[8]		550	pF
$t_{VD\text{-}DAT}$	Data Valid Time for Data from SCL LOW to SDA HIGH or LOW Output[8]	0	0.45	µs
$t_{VD\text{-}ACK}$	Data Valid Time for acknowledge from SCL LOW to SDA HIGH or LOW Output[8]	0	0.45	µs
V_{nL}	Noise Margin at the LOW Level[8]	0.2		V
V_{nH}	Noise Margin at the HIGH Level[8]	0.4		V

Note:

8. Guaranteed by characterization. Not production tested.

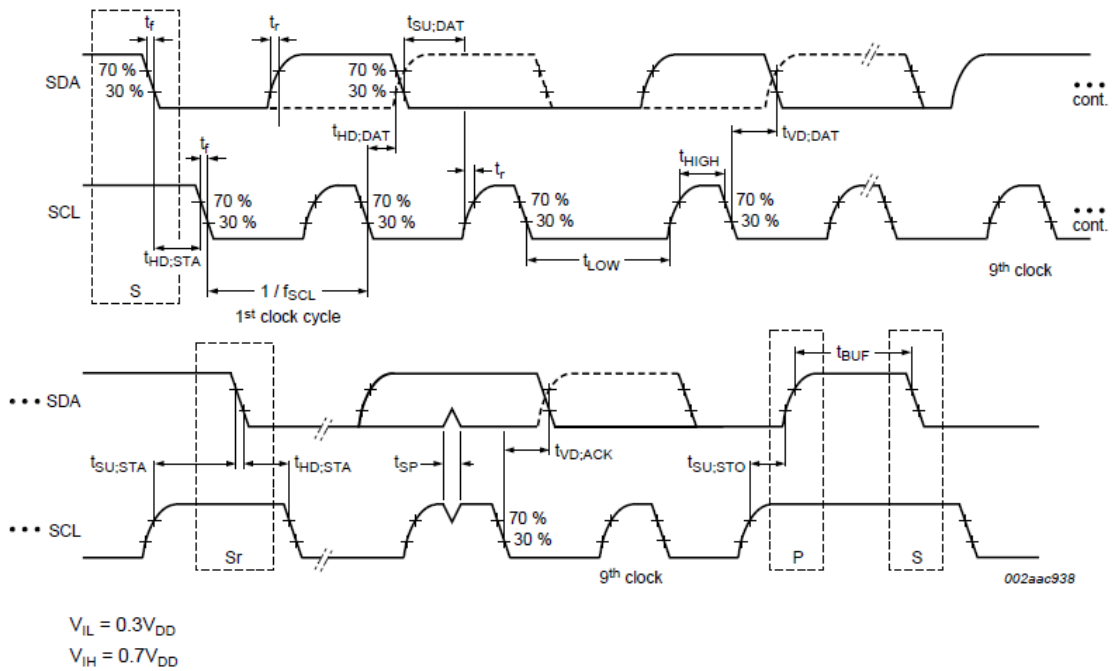

Figure 16. Definition of Timing for Full-Speed Mode Devices on the I²C Bus

Table 4. I²C™ Slave Address

Name	Size (Bits)	Bit 7	Bit 6	Bit 5	Bit 4	Bit 3	Bit 2	Bit 1	Bit 0
Slave Address	8	0	1	0	0	0	1	0	R/W

Register Definitions[9][10]

Address	Register Name	Type	Rst Val	Bit7	Bit6	Bit5	Bit4	Bit3	Bit2	Bit1	Bit0
0x01	Device ID	R	8x	Version ID[3:0]				Revision ID[3:0]			
0x02	Switches0	R/W	03	PU_EN2	PU_EN1	VCONN _CC2	VCONN _CC1	MEAS_CC2	MEAS_CC1	PDWN2	PDWN1
0x03	Switches1	R/W	20	POWERROLE	SPECREV1	SPECREV0	DATAROLE		AUTO_CRC	TXCC2	TXCC1
0x04	Measure	R/W	31		MEAS_VBUS	MDAC5	MDAC4	MDAC3	MDAC2	MDAC1	MDAC0
0x05	Slice	R/W	60	SDAC_HYS1	SDAC_HYS2	SDAC5	SDAC4	SDAC3	SDAC2	SDAC1	SDAC0
0x06	Control0	R/W/C	24		TX_FLUSH	INT_MASK		HOST_CUR1	HOST_CUR0	AUTO_PRE	TX_START
0x07	Control1	R/W/C	00		ENSOP2DB	ENSOP1DB	BIST_MODE2		RX_FLUSH	ENSOP2	ENSOP1
0x08	Control2	R/W	02	TOG_SAVE_PWR2	TOG_SAVE_PWR1	TOG_RD_ONLY		WAKE_EN	MODE[1:0]		TOGGLE
0x09	Control3	R/W	06		SEND_HARD_RESET		AUTO_HARDRESET	AUTO_SOFTRESET	N_RETRIES[1:0]		AUTO_RETRY
0x0A	Mask1	R/W	00	M_VBUSOK	M_ACTIVITY	M_COMP_CHNG	M_CRC_CHK	M_ALERT	M_WAKE	M_COLLISION	M_BC_LVL
0x0B	Power	R/W	01					PWR3	PWR2	PWR1	PWR0
0x0C	Reset	W/C	00							PD_RESET	SW_RES
0x0D	OCPreg	R/W	0F					OCP_RANGE	OCP_CUR2	OCP_CUR1	OCP_CUR0
0x0E	Maska	R/W	00	M_OCP_TEMP	M_TOGDONE	M_SOFTFAIL	M_RETRYFAIL	M_HARDSENT	M_TXSENT	M_SOFTRST	M_HARDRST
0x0F	Maskb	R/W	00								M_GCRCSENT
0x3C	Status0a	R	00			SOFTFAIL	RETRYFAIL	POWER3	POWER2	SOFTRST	HARDRST
0x3D	Status1a	R	00			TOGSS3	TOGSS2	TOGSS1	RXSOP2DB	RXSOP1DB	RXSOP
0x3E	Interrupta	R/C	00	I_OCP_TEMP	I_TOGDONE	I_SOFTFAIL	I_RETRYFAIL	I_HARDSENT	I_TXSENT	I_SOFTRST	I_HARDRST
0x3F	Interruptb	R/C	00								I_GCRCSENT
0x40	Status0	R	00	VBUSOK	ACTIVITY	COMP	CRC_CHK	ALERT	WAKE	BC_LVL1	BC_LVL0
0x41	Status1	R	28	RXSOP2	RXSOP1	RX_EMPTY	RX_FULL	TX_EMPTY	TX_FULL	OVRTEMP	OCP
0x42	Interrupt	R/C	00	I_VBUSOK	I_ACTIVITY	I_COMP_CHNG	I_CRC_CHK	I_ALERT	I_WAKE	I_COLLISION	I_BC_LVL
0x43	FIFOs	R/W[11]	00	Write to TX FIFO or read from RX FIFO repeatedly without address auto increment							

Type C Bits	USB PD Bits	General Bits

Notes:

9. Do not use registers that are blank.
10. Values read from undefined register bits are not defined and invalid. Do not write to undefined registers.
11. FIFO register is serially read/written without auto address increment.

Table 5. Device ID

Address: 01h
Reset Value: 0x1000_00XX
Type: Read

Bit #	Name	R/W/C	Size (Bits)	Description
7:4	Version ID	R	4	Device version ID by Trim or etc. **A_[Revision ID]: 1000 (e.g. A_revA)** B_[Revision ID]: 1001 C_[Revision ID]: 1010 etc
3:0	Revision ID	R	4	Revision History of each version [Version ID]_revA: 0000 (e.g. A_revA) [Version ID]_revB: 0001 [Version ID]_revC: 0010 etc

Table 6. Switches0

Address: 02h
Reset Value: 0x0000_0011
Type: Read/Write

Bit #	Name	R/W/C	Size (Bits)	Description
7	PU_EN2	R/W	1	1: Apply host pull up current to CC2 pin.
6	PU_EN1	R/W	1	1: Apply host pull up current to CC1 pin.
5	VCONN_CC2	R/W	1	1: Turn on the VCONN current to CC2 pin.
4	VCONN_CC1	R/W	1	1: Turn on the VCONN current to CC1 pin.
3	MEAS_CC2	R/W	1	1: Use the measure block to monitor or measure the voltage on CC2.
2	MEAS_CC1	R/W	1	1: Use the measure block to monitor or measure the voltage on CC1.
1	PDWN2	R/W	1	**1: Device pull down on CC2**. 0: no pull down.
0	PDWN1	R/W	1	**1: Device pull down on CC1**. 0: no pull down.

Table 7. Switches1

Address: 03h
Reset Value: 0x0010_0000
Type: Read/Write

Bit #	Name	R/W/C	Size (Bits)	Description
7	POWERROLE	R/W	1	Bit used for constructing the GoodCRC acknowledge packet. This bit corresponds to the Port Power Role bit in the message header if an SOP packet is received 1: Source if SOP **0: Sink if SOP**
6:5	SPECREV1: SPECREV0	R/W	2	Bit used for constructing the GoodCRC acknowledge packet. These bits correspond to the Specification Revision bits in the message header 00: Revision 1.0 **01: Revision 2.0** 10, 11: Do Not Use
4	DATAROLE	R/W	1	Bit used for constructing the GoodCRC acknowledge packet. This bit corresponds to the Port Data Role bit in the message header. For SOP: 1: SRC **0: SNK**
3	Reserved	N/A	1	Do Not Use
2	AUTO_CRC	R/W	1	1: Starts the transmitter automatically when a message with a good CRC is received and automatically sends a GoodCRC acknowledge packet back to the relevant SOP* **0: Feature disabled.**
1	TXCC2	R/W	1	1: Enable BMC transmit driver on CC2 pin.
0	TXCC1	R/W	1	1: Enable BMC transmit driver on CC1 pin.

Table 8. Measure

Address: 04h

Reset Value: 0x0011_0001

Type: Read/Write

Bit #	Name	R/W/C	Size (Bits)	Description
7	Reserved	N/A	1	Do Not Use
6	MEAS_VBUS	R/W	1	**0: MDAC/comparator measurement is controlled by MEAS_CC* bits.** 1: Measure VBUS with the MDAC/comparator. This requires MEAS_CC* bits to be 0.
5:0	MDAC[5:0]	R/W	6	Measure Block DAC data input. LSB is equivalent to 42 mV of voltage which is compared to the measured CC voltage. The measured CC is selected by MEAS_CC2, or MEAS_CC1 bits.

MDAC[5:0]	MEAS_VBUS=0	MEAS_VBUS=1	Unit
00_0000	**0.042**	**0.420**	**V**
00_0001	0.084	0.840	V
11_0000	2.058	20.58	V
11_0011	2.184	21.84	V
11_1110	2.646	26.46	V
11_1111	>2.688	26.88	V

Table 9. Slice

Address: 05h

Reset Value: 0x0110_0000

Type: Read/Write

Bit #	Name	R/W/C	Size (Bits)	Description
7:6	SDAC_HYS[1:0]	R/W	2	Adds hysteresis where there are now two thresholds, the ***lower threshold which is always the value programmed by SDAC[5:0]*** and the higher threshold that is: 11: 255 mV hysteresis: higher threshold = (SDAC value + 20hex) 10 = 170 mV hysteresis: higher threshold = (SDAC value + Ahex) **01 = 85 mV hysteresis: higher threshold = (SDAC value + 5)** 00 = No hysteresis: higher threshold = SDAC value
5:0	SDAC[5:0]	R/W	6	BMC Slicer DAC data input. Allows for a programmable threshold so as to meet the BMC receive mask under all noise conditions.

Table 10. Control0

Address: 06h

Reset Value: 0x0010_0100

Type: (see column below)

Bit #	Name	R/W/C	Size (Bits)	Description
7	Reserved	N/A	1	Do Not Use
6	TX_FLUSH	W/C	1	1: Self clearing bit to flush the content of the transmit FIFO.
5	INT_MASK	R/W	1	**1: Mask all interrupts.** 0: Interrupts to host are enabled.
4	Reserved	N/A	1	Do Not Use
3:2	HOST_CUR[1:0]	R/W	2	1: Controls the host pull up current enabled by PU_EN[2:1]: 00: No current **01: 80 µA – Default USB power.** 10: 180 µA – Medium Current Mode: 1.5 A 11: 330 µA – High Current Mode: 3 A
1	AUTO_PRE	R/W	1	1: Starts the transmitter automatically when a message with a good CRC is received. This allows the software to take as much as 300 µS to respond after the I_CRC_CHK interrupt is received. Before starting the transmitter, an internal timer waits for approximately 170 µS before executing the transmit start and preamble. **0: Feature disabled.**
0	TX_START	W/C	1	1: Start transmitter using the data in the transmit FIFO. Preamble is started first. During the preamble period the transmit data can start to be written to the transmit FIFO. Self clearing.

Table 11. Control1

Address: 07h

Reset Value: 0x0000_0000

Type: (see column below)

Bit #	Name	R/W/C	Size (Bits)	Description
7	Reserved	N/A	1	Do Not Use
6	ENSOP2DB	R/W	1	1: Enable SOP”_DEBUG (SOP double prime debug) packets **0: Ignore SOP”_DEBUG (SOP double prime debug) packets**
5	ENSOP1DB	R/W	1	1: Enable SOP‘_DEBUG (SOP prime debug) packets **0: Ignore SOP‘_DEBUG** (SOP prime debug) **packets**
4	BIST_MODE2	R/W	1	1: Sent BIST Mode 01s pattern for testing
3	Reserved	N/A	1	Do Not Use
2	RX_FLUSH	W/C	1	1: Self clearing bit to flush the content of the receive FIFO.
1	ENSOP2	R/W	1	1: Enable SOP”(SOP double prime) packets **0: Ignore SOP”(SOP double prime) packets**
0	ENSOP1	R/W	1	1: Enable SOP‘(SOP prime) packets **0: Ignore SOP‘**(SOP prime) **packets**

Table 12. Control2

Address: 08h

Reset Value: 0x0000_0010

Type: (see column below)

Bit #	Name	R/W/C	Size (Bits)	Description
7:6	TOG_SAVE_PWR2: TOG_SAVE_PWR1	N/A	2	**00: Don't go into the DISABLE state after one cycle of toggle** 01: Wait between toggle cycles for t_{DIS} time of 40 ms 10: Wait between toggle cycles for t_{DIS} time of 80 ms 11: Wait between toggle cycles for t_{DIS} time of 160 ms
5	TOG_RD_ONLY	R/W	1	1: When TOGGLE=1 only Rd values will cause the TOGGLE state machine to stop toggling and trigger the I_TOGGLE interrupt. **0: When TOGGLE=1, Rd and Ra values will cause the TOGGLE state machine to stop toggling.**
4	Reserved	N/A	1	Do Not Use
3	WAKE_EN	R/W	1	1: Enable Wake Detection functionality if the power state is correct **0: Disable Wake Detection functionality**
2:1	MODE	R/W	2	11: Enable SRC polling functionality if TOGGLE=1 10: Enable SNK polling functionality if TOGGLE=1 **01: Enable DRP polling functionality if TOGGLE=1** 00: Do Not Use
0	TOGGLE	R/W	1	1: Enable DRP, SNK or SRC Toggle autonomous functionality **0: Disable DRP, SNK and SRC Toggle functionality**

Table 13. Control3

Address: 09h

Reset Value: 0x0000_0110

Type: (see column below)

Bit #	Name	R/W/C	Size (Bits)	Description
7	Reserved	N/A	1	Do Not Use
6	SEND_HARD_RESET	W/C	1	1: Send a hard reset packet (highest priority) **0: Don't send a soft reset packet**
5	Reserved	N/A	1	Do Not Use
4	AUTO_HARDRESET	R/W	1	1: Enable automatic hard reset packet if soft reset fail **0: Disable automatic hard reset packet if soft reset fail**
3	AUTO_SOFTRESET	R/W	1	1: Enable automatic soft reset packet if retries fail **0: Disable automatic soft reset packet if retries fail**
2:1	N_RETRIES[1:0]	R/W	2	**11: Three retries of packet (four total packets sent)** 10: Two retries of packet (three total packets sent) 01: One retry of packet (two total packets sent) 00: No retries (similar to disabling auto retry)
0	AUTO_RETRY	R/W	1	1: Enable automatic packet retries if GoodCRC is not received **0: Disable automatic packet retries if GoodCRC not received**

Table 14. Mask

Address: 0Ah

Reset Value: 0x0000_0000

Type: Read/Write

Bit #	Name	R/W/C	Size (Bits)	Description
7	M_VBUSOK	R/W	1	1: Mask I_VBUSOK interrupt bit. **0: Do not mask.**
6	M_ACTIVITY	R/W	1	1: Mask interrupt for a transition in CC bus activity. **0: Do not mask.**
5	M_COMP_CHNG	R/W	1	1: Mask I_COMP_CHNG interrupt for change is the value of COMP, the measure comparator. **0: Do not mask.**
4	M_CRC_CHK	R/W	1	1: Mask interrupt from CRC_CHK bit. **0: Do not mask.**
3	M_ALERT	R/W	1	1: Mask the I_ALERT interrupt bit. **0: Do not mask.**
2	M_WAKE	R/W	1	1: Mask the I_WAKE interrupt bit. **0: Do not mask.**
1	M_COLLISION	R/W	1	1: Mask the I_COLLISION interrupt bit. **0: Do not mask.**
0	M_BC_LVL	R/W	1	1: Mask a change in host requested current level. **0: Do not mask.**

Table 15. Power

Address: 0Bh

Reset Value: 0x0000_0001

Type: Read/Write

Bit #	Name	R/W/C	Size (Bits)	Description
7:4	Reserved	N/A	4	Do Not Use
3:0	PWR[3:0]	R/W	4	Power enables: **PWR[0]: Bandgap and wake circuit.** PWR[1]: Receiver powered and current references for Measure block PWR[2]: Measure block powered. PWR[3]: Enable internal oscillator.

Table 16. Reset

Address: 0Ch

Reset Value: 0x0000_0000

Type: Write/Clear

Bit #	Name	R/W/C	Size (Bits)	Description
7:2	Reserved	N/A	6	Do Not Use
1	PD_RESET	W/C	1	1: Reset just the PD logic for both the PD transmitter and receiver.
0	SW_RES	W/C	1	1: Reset the FUSB302 including the I2C registers to their default values.

Table 17. OCPreg

Address: 0Dh

Reset Value: 0x0000_1111

Type: Read/Write

Bit #	Name	R/W/C	Size (Bits)	Description
7:4	Reserved	N/A	4	Do Not Use
3	OCP_RANGE	R/W	1	1: OCP range between 100 mA-800 mA (max_range=800 mA) 0: OCP range between 10 mA-80 mA (max_range=80 mA)
2:0	OCP_CUR2, OCP_CUR1, OCP_CUR0	R/W	3	111: max_range (see bit definition above for OCP_RANGE) 110: 7*max_range/8 101: 6*max_range/8 100: 5*max_range/8 011: 4*max_range/8 010: 3*max_range/8 001: 2*max_range/8 000: max_range/8

Table 18. Maska

Address: 0Eh

Reset Value: 0x0000_0000

Type: Read/Write

Bit #	Name	R/W/C	Size (Bits)	Description
7	M_OCP_TEMP	R/W	1	1: Mask the I_OCP_TEMP interrupt
6	M_TOGDONE	R/W	1	1: Mask the I_TOGDONE interrupt
5	M_SOFTFAIL	R/W	1	1: Mask the I_SOFTFAIL interrupt
4	M_RETRYFAIL	R/W	1	1: Mask the I_RETRYFAIL interrupt
3	M_HARDSENT	R/W	1	1: Mask the I_HARDSENT interrupt
2	M_TXSENT	R/W	1	1: Mask the I_TXSENT interrupt
1	M_SOFTRST	R/W	1	1: Mask the I_SOFTRST interrupt
0	M_HARDRST	R/W	1	1: Mask the I_HARDRST interrupt

Table 19. Maskb

Address: 0Fh

Reset Value: 0x0000_0000

Type: Read/Write

Bit #	Name	R/W/C	Size (Bits)	Description
7:1	Reserved	N/A	6	Do Not Use
0	M_GCRCSENT	R/W	1	1: Mask the I_GCRCSENT interrupt

Table 20. Status0a

Address: 3Ch

Reset Value: 0x0000_0000

Type: Read

Bit #	Name	R/W/C	Size (Bits)	Description
7:6	Reserved	N/A	2	Do Not Use
5	SOFTFAIL	R	1	1: All soft reset packets with retries have failed to get a GoodCRC acknowledge. This status is cleared when a START_TX, TXON or SEND_HARD_RESET is executed.
4	RETRYFAIL	R	1	1: All packet retries have failed to get a GoodCRC acknowledge. This status is cleared when a START_TX, TXON or SEND_HARD_RESET is executed.
3:2	POWER3:POWER2	R	2	Internal power state when logic internals needs to control the power state. POWER3 corresponds to PWR3 bit and POWER2 corresponds to PWR2 bit. The power state is the higher of both PWR[3:0] and {POWER3, POWER2, PWR[1:0]} so that if one is 03 and the other is F then the internal power state is F.
1	SOFTRST	R	1	1: One of the packets received was a soft reset packet
0	HARDRST	R	1	1: Hard Reset PD ordered set has been received

Table 21. Status1a

Address: 3Dh

Reset Value: 0x0000_0000

Type: Read

Bit #	Name	R/W/C	Size (Bits)	Description
7:6	Reserved	N/A	2	Do Not Use
5:3	TOGSS3: TOGSS2: TOGSS1	R	3	000: Toggle logic running (processor has previously written TOGGLE=1) 001: Toggle functionality has settled to SRCon CC1 (STOP_SRC1 state) 010: Toggle functionality has settled to SRCon CC2 (STOP_SRC2 state) 101: Toggle functionality has settled to SNKon CC1 (STOP_SNK1 state) 110: Toggle functionality has settled to SNKon CC2 (STOP_SNK2 state) 111: Toggle functionality has detected AudioAccessory with vRa on both CC1 and CC2 (settles to STOP_SRC1 state) Otherwise: Not defined (do not interpret)
2	RXSOP2DB	R	1	1: Indicates the last packet placed in the RxFIFO is type SOP”_DEBUG (SOP double prime debug).
1	RXSOP1DB	R	1	1: Indicates the last packet placed in the RxFIFO is type SOP’_DEBUG (SOP prime debug).
0	RXSOP	R	1	1: Indicates the last packet placed in the RxFIFO is type SOP.

Table 22. Interrupta

Address: 3Eh

Reset Value: 0x0000_0000

Type: Read/Clear

Bit #	Name	R/W/C	Size (Bits)	Description
7	I_OCP_TEMP	R/C	1	1: Interrupt from either a OCP event on one of the VCONN switches or an over-temperature event
6	I_TOGDONE	R/C	1	1: Interrupt indicating the TOGGLE functionality was terminated because a device was detected.
5	I_SOFTFAIL	R/C	1	1: Interrupt from automatic soft reset packets with retries have failed
4	I_RETRYFAIL	R/C	1	1: Interrupt from automatic packet retries have failed
3	I_HARDSENT	R/C	1	1: Interrupt from successfully sending a hard reset ordered set
2	I_TXSENT	R/C	1	1: Interrupt to alert that we sent a packet that was acknowledged with a GoodCRC response packet
1	I_SOFTRST	R/C	1	1: Received a soft reset packet
0	I_HARDRST	R/C	1	1: Received a hard reset ordered set

Table 23. Interruptb

Address: 3Fh

Reset Value: 0x0000_0000

Type: Read/Clear

Bit #	Name	R/W/C	Size (Bits)	Description
7	Reserved	N/A	6	Do Not Use
0	I_GCRCSENT	R/C	1	1: Sent a GoodCRC acknowledge packet in response to an incoming packet that has the correct CRC value.

Table 24. Status0

Address: 40h

Reset Value: 0x0000_0000

Type: Read

Bit #	Name	R/W/C	Size (Bits)	Description
7	VBUSOK	R	1	1: Interrupt occurs when VBUS transitions through vVBUSthr. This bit typically is used to recognize port partner during startup.
6	ACTIVITY	R	1	1: Transitions are detected on the active CC* line. This bit goes high after a minimum of 3 CC transitions, and remains high for tACTIVITY after last transition on CC. **0: inactive.**
5	COMP	R	1	1: Measured CC* input is higher than reference level driven from the MDAC. **0: Measured CC* input is lower than reference level driven from the MDAC.**
4	CRC_CHK	R	1	1: Indicates the last received packet had the correct CRC. This bit remains set until the SOP of the next packet. **0: Packet received for an enabled SOP* and CRC for the enabled packet received was incorrect**
3	ALERT	R	1	1: Alert software an error condition has occurred. An alert is caused by: TX_FULL: the transmit FIFO is full. RX_FULL: the receive FIFO is full. See **Status1** bits
2	WAKE	R	1	1: Voltage on CC indicated a device attempting to attach. 0: WAKE either not enabled (WAKE_EN=0) or no device attached.
1:0	BC_LVL[1:0]	R	2	Current voltage status of the measured CC pin interpreted as host current levels as follows: 00: < 200 mV 01: >200 mV, <660 mV 10: >660 mV, <1.23 V 11:>1.23 V Note the software must measure these at an appropriate time, while there is no signaling activity on the selected CC line. BC_LVL is only defined when Measure block is on which is when register bits PWR[2]=1 and either MEAS_CC1=1 or MEAS_CC2=1

Table 25. Status1

Address: 41h

Reset Value: 0x0010_1000

Type: Read

Bit #	Name	R/W/C	Size (Bits)	Description
7	RXSOP2	R	1	1: Indicates the last packet placed in the RxFIFO is type SOP'' (SOP double prime).
6	RXSOP1	R	1	1: Indicates the last packet placed in the RxFIFO is type SOP' (SOP prime).
5	RX_EMPTY	R	1	1: The receive FIFO is empty.
4	RX_FULL	R	1	1: The receive FIFO is full.
3	TX_EMPTY	R	1	1: The transmit FIFO is empty.
2	TX_FULL	R	1	1: The transmit FIFO is full.
1	OVRTEMP	R	1	1: Temperature of the device is too high.
0	OCP	R	1	1: Indicates an over-current or short condition has occurred on the VCONN switch.

Table 26. Interrupt

Address: 42h

Reset Value: 0x0000_0000

Type: Read/Clear

Bit #	Name	R/W/C	Size (Bits)	Description
7	I_VBUSOK	R/C	1	1: Interrupt occurs when VBUS transitions through 4.5 V. This bit typically is used to recognize port partner during startup.
6	I_ACTIVITY	R/C	1	1: A change in the value of ACTIVITY of the CC bus has occurred.
5	I_COMP_CHNG	R/C	1	1: A change in the value of COMP has occurred. Indicates selected CC line has tripped a threshold programmed into the MDAC.
4	I_CRC_CHK	R/C	1	1: The value of CRC_CHK newly valid. I.e. The validity of the incoming packet has been checked.
3	I_ALERT	R/C	1	1: Alert software an error condition has occurred. An alert is caused by: TX_FULL: the transmit FIFO is full. RX_FULL: the receive FIFO is full. See **Status1** bits.
2	I_WAKE	R/C	1	1: Voltage on CC indicated a device attempting to attach. Software must then power up the clock and receiver blocks.
1	I_COLLISION	R/C	1	1: When a transmit was attempted, activity was detected on the active CC line. Transmit is not done. The packet is received normally.
0	I_BC_LVL	R/C	1	1: A change in host requested current level has occurred.

Table 27. FIFOs

Address: 43h

Reset Value: 0x0000_0000

Type: (see column below)

Bit #	Name	R/W/C	Size (Bits)	Description
7:0	TX/RX Token	Read or Write	8	Writing to this register writes a byte into the transmit FIFO. Reading from this register reads from the receive FIFO. Each byte is a coded token. Or a token followed by a fixed number of packed data byte (*see token coding in Table 28*).

Software Model

Port software interacts with the port chip in two primary ways:

- I^2C Registers
- 8 bit data tokens sent to or received from the FIFO register.
- All reserved bits written in the TxFIFO should be 0 and all reserved bit read from the RxFIFO should be ignored.

Transmit Data Tokens

Transmit data tokens provide in-sequence transmit control and data for the transmit logic. Note that the token codes, and their equivalent USB PD K-Code are not the same. Tokens are read one at a time when they reach the end of the TX FIFO. I.e., the specified token action is performed before the next token is read from the TX FIFO.

The tokens are defined as follows:

Table 28. Tokens Used in FIFO

Code	Name	Size (Bytes)	Description
101x-xxx1 (0xA1)	TXON	1	Alternative method for starting the transmitter with the TX-START bit. This is not a token written to the TxFIFO but a command much like TX_START but it is more convenient to write it while writing to the TxFIFO in one contiguous write operation. It is preferred that the TxFIFO is first written with data and then TXON or TX_START is executed. It is expected that A1h will be written for TXON not any other bits where x is non-zero such as B1h, BFh, etc
0x12	SOP1	1	When reaching the end of the FIFO causes a Sync-1 symbol to be transmitted.
0x13	SOP2	1	When reaching the end of the FIFO causes a Sync-2 symbol to be transmitted.
0x1B	SOP3	1	When reaching the end of the FIFO causes a Sync-3 symbol to be transmitted.
0x15	RESET1	1	When reaching the end of the FIFO causes a RST-1 symbol to be transmitted.
0x16	RESET2	1	When reaching the end of the FIFO causes a RST-2 symbol to be transmitted.
0x80	PACKSYM	1+N	This data token must be immediately followed by a sequence of N packed data bytes. This token is defined by the 3 MSB's being set to 3'b100. The 5 LSB's are the number of packed bytes being sent. Note: N cannot be less than 2 since the minimum control packet has a header that is 2 bytes and N cannot be greater than 30 since the maximum data packet has 30 bytes (2 byte header + 7 data objects each having 4 bytes) Packed data bytes have two 4 bit data fields. The 4 LSB's are sent first, after 4b5b conversion etc in the chip.
0xFF	JAM_CRC	1	Causes the CRC, calculated by the hardware, to be inserted into the transmit stream when this token reaches the end of the TX FIFO.
0x14	EOP	1	Causes an EOP symbol to be sent when this token reaches the end of the TX FIFO.
0xFE	TXOFF	1	Turn off the transmit driver. Typically the next symbol after EOP.

Receive Data Tokens

Receive data tokens provide in-sequence receive control and data for the receive logic. The RxFIFO can absorb as many packets as the number of bytes in the RxFIFO (80 bytes). The tokens are defined as follows:

Table 29. Tokens Used in RxFIFO

Code (in binary)	Name	Size (Bytes)	Description
111b_bbbb	SOP	1	First byte of a received packet to indicate that the packet is an SOP packet (“b” is undefined and can be any bit)
110b_bbbb	SOP1	1	First byte of a received packet to indicate that the packet is an SOP’ packet and occurs only if ENSOP1=1 (“b” is undefined and can be any bit)
101b_bbbb	SOP2	1	First byte of a received packet to indicate that the packet is an SOP’’ packet and occurs only if ENSOP2=1 (“b” is undefined and can be any bit)
100b_bbbb	SOP1DB	1	First byte of a received packet to indicate that the packet is an SOP’_DEBUG packet and occurs only if ENSOP1DB=1 (“b” is undefined and can be any bit)
011b_bbbb	SOP2DB	1	First byte of a received packet to indicate that the packet is an SOP’’_DEBUG packet and occurs only if ENSOP2DB=1 (“b” is undefined and can be any bit)
010b_bbbb / 001b_bbbb / 000b_bbbb	Do Not Use	1	These can be used in future versions of this device and should not be relied on to be any special value. (“b” is undefined and can be any bit)

Reference Schematic

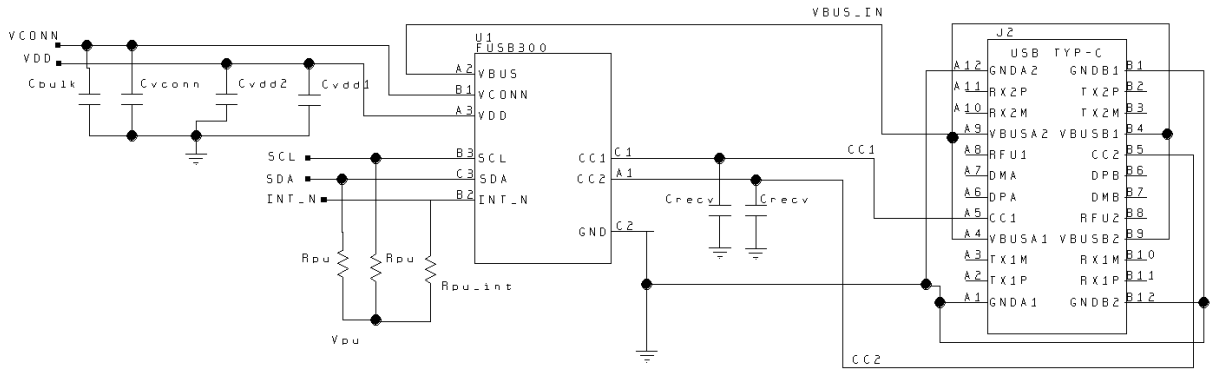

Figure 17. FUSB300/302 Reference Schematic Diagram

Table 30. Recommended Component Values for Reference Schematic

Symbol	Parameter	Recommended Value			Unit
		Min.	Typ.	Max.	
C_{RECV}	CC_X Receiver Capacitance	200		600	pF
C_{BULK}	VCONN Source Bulk Capacitance	10		220	µF
C_{VCONN}	VCONN Decoupling Capacitance		0.1		µF
C_{VDD1}	V_{DD} Decoupling Capacitance		0.1		µF
C_{VDD2}	V_{DD} Decoupling Capacitance		1.0		µF
R_{PU}	I2C Pull-up Resistors		4.7		kΩ
R_{PU_INT}	INT_N Pull-up Resistor	1.0	4.7		kΩ
V_{PU}	I2C Pull-up Voltage	1.62	1.80	1.98	V

The table below is in reference to the WLCSP drawing on the following page.

Product-Specific Dimensions

Product	D	E	X	Y
FUSB302UCX	1.260 mm	1.215 mm	0.2075 mm	0.230 mm

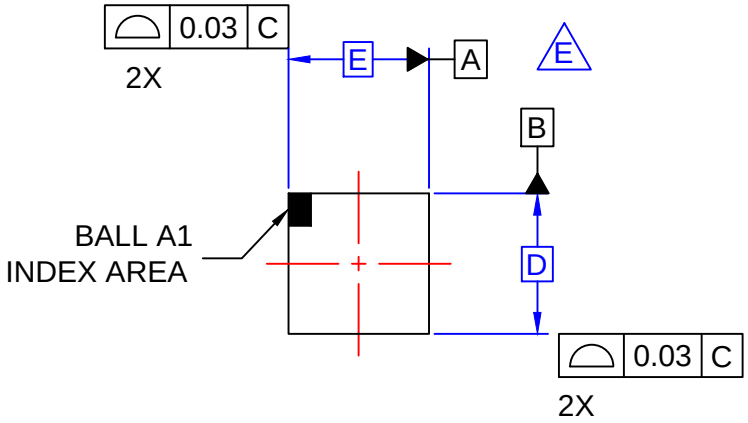

TOP VIEW

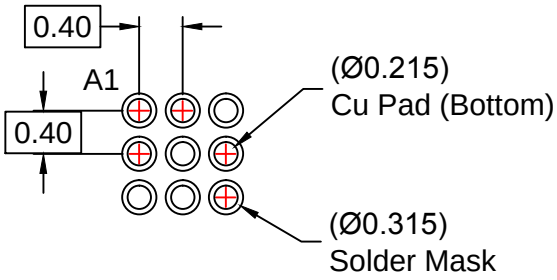

RECOMMENDED LAND PATTERN
(NSMD PAD TYPE)

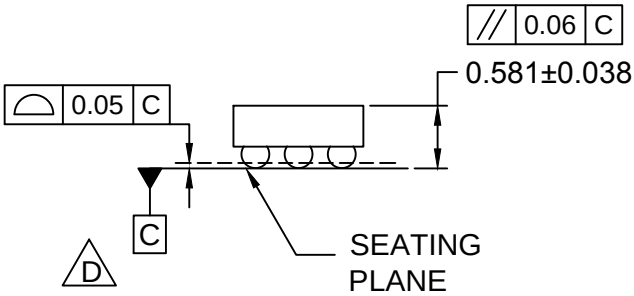

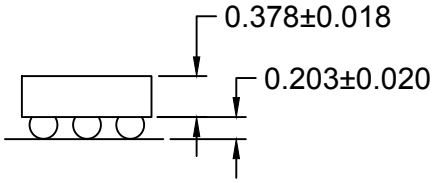

SIDE VIEWS

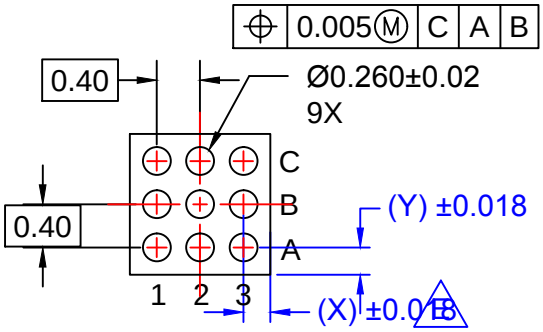

BOTTOM VIEW

NOTES

A. NO JEDEC REGISTRATION APPLIES.

B. DIMENSIONS ARE IN MILLIMETERS.

C. DIMENSIONS AND TOLERANCE PER ASME Y14.5M, 2009.

D. DATUM C IS DEFINED BY THE SPHERICAL CROWNS OF THE BALLS.

E. FOR DIMENSIONS D,E,X, AND Y SEE PRODUCT DATASHEET.

F. DRAWING FILNAME: MKT-UC009Ak rev2

FAIRCHILD

TRADEMARKS

The following includes registered and unregistered trademarks and service marks, owned by Fairchild Semiconductor and/or its global subsidiaries, and is not intended to be an exhaustive list of all such trademarks.

AccuPower™
AttitudeEngine™
Awinda®
AX-CAP®*
BitSiC™
Build it Now™
CorePLUS™
CorePOWER™
CROSSVOLT™
CTL™
Current Transfer Logic™
DEUXPEED®
Dual Cool™
EcoSPARK®
EfficientMax™
ESBC™
®
Fairchild®
Fairchild Semiconductor®
FACT Quiet Series™
FACT®
FastvCore™
FETBench™
FPS™
F-PFS™
FRFET®
Global Power Resource℠
GreenBridge™
Green FPS™
Green FPS™ e-Series™
G*max*™
GTO™
IntelliMAX™
ISOPLANAR™
Making Small Speakers Sound Louder and Better™
MegaBuck™
MICROCOUPLER™
MicroFET™
MicroPak™
MicroPak2™
MillerDrive™
MotionMax™
MotionGrid®
MTi®
MTx®
MVN®
mWSaver®
OptoHiT™
OPTOLOGIC®
OPTOPLANAR®
®
Power Supply WebDesigner™
PowerTrench®
PowerXS™
Programmable Active Droop™
QFET®
QS™
Quiet Series™
RapidConfigure™
™
Saving our world, 1mW/W/kW at a time™
SignalWise™
SmartMax™
SMART START™
Solutions for Your Success™
SPM®
STEALTH™
SuperFET®
SuperSOT™-3
SuperSOT™-6
SuperSOT™-8
SupreMOS®
SyncFET™
Sync-Lock™
SYSTEM GENERAL®*
TinyBoost®
TinyBuck®
TinyCalc™
TinyLogic®
TINYOPTO™
TinyPower™
TinyPWM™
TinyWire™
TranSiC™
TriFault Detect™
TRUECURRENT®*
µSerDes™
µSerDes™
UHC®
Ultra FRFET™
UniFET™
VCX™
VisualMax™
VoltagePlus™
XS™
Xsens™
仙童®

* Trademarks of System General Corporation, used under license by Fairchild Semiconductor.

DISCLAIMER

FAIRCHILD SEMICONDUCTOR RESERVES THE RIGHT TO MAKE CHANGES WITHOUT FURTHER NOTICE TO ANY PRODUCTS HEREIN TO IMPROVE RELIABILITY, FUNCTION, OR DESIGN. TO OBTAIN THE LATEST, MOST UP-TO-DATE DATASHEET AND PRODUCT INFORMATION, VISIT OUR WEBSITE AT HTTP://WWW.FAIRCHILDSEMI.COM. FAIRCHILD DOES NOT ASSUME ANY LIABILITY ARISING OUT OF THE APPLICATION OR USE OF ANY PRODUCT OR CIRCUIT DESCRIBED HEREIN; NEITHER DOES IT CONVEY ANY LICENSE UNDER ITS PATENT RIGHTS, NOR THE RIGHTS OF OTHERS. THESE SPECIFICATIONS DO NOT EXPAND THE TERMS OF FAIRCHILD'S WORLDWIDE TERMS AND CONDITIONS, SPECIFICALLY THE WARRANTY THEREIN, WHICH COVERS THESE PRODUCTS.

AUTHORIZED USE

Unless otherwise specified in this data sheet, this product is a standard commercial product and is not intended for use in applications that require extraordinary levels of quality and reliability. This product may not be used in the following applications, unless specifically approved in writing by a Fairchild officer: (1) automotive or other transportation, (2) military/aerospace, (3) any safety critical application – including life critical medical equipment – where the failure of the Fairchild product reasonably would be expected to result in personal injury, death or property damage. Customer's use of this product is subject to agreement of this Authorized Use policy. In the event of an unauthorized use of Fairchild's product, Fairchild accepts no liability in the event of product failure. In other respects, this product shall be subject to Fairchild's Worldwide Terms and Conditions of Sale, unless a separate agreement has been signed by both Parties.

ANTI-COUNTERFEITING POLICY

Fairchild Semiconductor Corporation's Anti-Counterfeiting Policy. Fairchild's Anti-Counterfeiting Policy is also stated on our external website, www.fairchildsemi.com, under Terms of Use

Counterfeiting of semiconductor parts is a growing problem in the industry. All manufacturers of semiconductor products are experiencing counterfeiting of their parts. Customers who inadvertently purchase counterfeit parts experience many problems such as loss of brand reputation, substandard performance, failed applications, and increased cost of production and manufacturing delays. Fairchild is taking strong measures to protect ourselves and our customers from the proliferation of counterfeit parts. Fairchild strongly encourages customers to purchase Fairchild parts either directly from Fairchild or from Authorized Fairchild Distributors who are listed by country on our web page cited above. Products customers buy either from Fairchild directly or from Authorized Fairchild Distributors are genuine parts, have full traceability, meet Fairchild's quality standards for handling and storage and provide access to Fairchild's full range of up-to-date technical and product information. Fairchild and our Authorized Distributors will stand behind all warranties and will appropriately address any warranty issues that may arise. Fairchild will not provide any warranty coverage or other assistance for parts bought from Unauthorized Sources. Fairchild is committed to combat this global problem and encourage our customers to do their part in stopping this practice by buying direct or from authorized distributors.

PRODUCT STATUS DEFINITIONS

Definition of Terms

Datasheet Identification	Product Status	Definition
Advance Information	Formative / In Design	Datasheet contains the design specifications for product development. Specifications may change in any manner without notice.
Preliminary	First Production	Datasheet contains preliminary data; supplementary data will be published at a later date. Fairchild Semiconductor reserves the right to make changes at any time without notice to improve design.
No Identification Needed	Full Production	Datasheet contains final specifications. Fairchild Semiconductor reserves the right to make changes at any time without notice to improve the design.
Obsolete	Not In Production	Datasheet contains specifications on a product that is discontinued by Fairchild Semiconductor. The datasheet is for reference information only.

Rev. I77